EVALUATION REPORT

FLORIDA BUILDING CODE, 9TH EDITION (2026)

Issued August 5, 2026

Manufacturer: TRI COUNTY METALS
301 SE 16th Street
Trenton, FL 32693
(877) 766-3309
www.tricountymetals.com

Manufacturing Locations: Trenton, FL

Quality Assurance: PRI Construction Materials Technologies (QUA9110)

SCOPE

Category: Roofing
Subcategory: Metal Roofing
Code Edition: Florida Building Code, 9th Edition (2026) Non-HVHZ
Code Sections: 1504.3, 1504.3.2
Properties: Wind Resistance

REFERENCES

Entity	Report No.	Standard	Year
Force Engineering & Testing, Inc. (TST5328)	136-0027T-12A,B	TAS 125	2003
		UL 580	2006
		UL 1897	2015
Force Engineering & Testing, Inc. (TST5328)	136-0027T-12C	FM 4471	1992
Force Engineering & Testing, Inc. (TST5328)	136-0044T-14A,B	TAS 125	2003
		UL 580	2006
		UL 1897	2015
Force Engineering & Testing, Inc. (TST5328)	136-0084T-14A,B	TAS 125	2003
		UL 580	2006
		UL 1897	2015
Force Engineering & Testing, Inc. (TST5328)	136-0087T-13	TAS 125	2003
		UL 580	2006
		UL 1897	2015
Force Engineering & Testing, Inc. (TST5328)	136-0099T-14A,B	TAS 125	2003
		UL 580	2006
		UL 1897	2015
Force Engineering & Testing, Inc. (TST5328)	136-0172T-12A,B	TAS 125	2003
		UL 580	2006
		UL 1897	2015
Force Engineering & Testing, Inc. (TST5328)	136-0172T-12C,D	TAS 125	2003
		UL 580	2006
		UL 1897	2015
Force Engineering & Testing, Inc. (TST5328)	136-0172T-12E	FM 4471	1992
Force Engineering & Testing, Inc. (TST5328)	136-0173T-12A,B	TAS 125	2003
		UL 580	2006
		UL 1897	2015
Force Engineering & Testing, Inc. (TST5328)	136-0173T-12C,D	TAS 125	2003
		UL 580	2006
		UL 1897	2015
Force Engineering & Testing, Inc. (TST5328)	136-0299T-13	TAS 125	2003
		UL 580	2006
		UL 1897	2015

This evaluation report is provided for State of Florida product approval under Rule 61G20-3. The manufacturer shall notify CREEK Technical Services, LLC of any product changes or quality assurance changes throughout the duration for which this report is valid. This evaluation report does not express nor imply warranty, installation, recommended use, or other product attributes that are not specifically addressed herein.

Entity	Report No.	Standard	Year
Force Engineering & Testing, Inc. (TST5328)	136-0408T-09A,B	TAS 125	2003
		UL 580	2006
		UL 1897	2015
Force Engineering & Testing, Inc. (TST5328)	136-0408T-09C	FM 4471	1992
PRI Construction Materials Technologies (TST5878)	945T0002	ASTM B 117	2016
PRI Construction Materials Technologies (TST5878)	945T0004	ASTM G 155	2013
PRI Construction Materials Technologies (TST5878)	1272T0002	ASTM B 117	2016
		TAS 110	2000
PRI Construction Materials Technologies (TST5878)	1272T0003	ASTM B 117	2016
		TAS 110	2000
PRI Construction Materials Technologies (TST5878)	1272T0005	ASTM G 155	2021
		TAS 110	2000
PRI Construction Materials Technologies (TST5878)	1272T0006	ASTM G 155	2021
		TAS 110	2000
PRI Construction Materials Technologies (TST5878)	1930T0001	TAS 125	2003
		UL 580	2006
		UL 1897	2015
PRI Construction Materials Technologies (TST5878)	1930T0002	TAS 125	2003
		UL 580	2006
		UL 1897	2015
PRI Construction Materials Technologies (TST5878)	1930T0003	TAS 125	2003
		UL 580	2006
		UL 1897	2015
PRI Construction Materials Technologies (TST5878)	1930T0004	TAS 125	2003
		UL 580	2006
		UL 1897	2015
PRI Construction Materials Technologies (TST5878)	1930T0009	FM 4471	1992
PRI Construction Materials Technologies (TST5878)	1930T0010	ASTM B 117	2016
		TAS 110	2000
PRI Construction Materials Technologies (TST5878)	1930T0011	ASTM G 155	2021
		TAS 110	2000
PRI Construction Materials Technologies (TST5878)	1930T0013	TAS 125	2003
		UL 580	2006
		UL 1897	2015
PRI Construction Materials Technologies (TST5878)	1930T0015	UL 580	2006
		UL 1897	2015
PRI Construction Materials Technologies (TST5878)	1930T0016	TAS 125	2003
		UL 580	2006
		UL 1897	2015
PRI Construction Materials Technologies (TST5878)	1930T0017	ASTM E 1592	2005(2017)
PRI Construction Materials Technologies (TST5878)	1930T0018	TAS 125	2003
		UL 580	2006
		UL 1897	2015
PRI Construction Materials Technologies (TST5878)	1930T0019	UL 580	2006
		UL 1897	2015
PRI Construction Materials Technologies (TST5878)	1930T0020	TAS 125	2003
		UL 580	2006
		UL 1897	2015
PRI Construction Materials Technologies (TST5878)	1930T0026	TAS 125	2003
		UL 580	2006
		UL 1897	2015
PRI Construction Materials Technologies (TST5878)	1930T0027	TAS 125	2003
		UL 580	2006
		UL 1897	2015
PRI Construction Materials Technologies (TST5878)	1930T0028	ASTM C 794	2001
PRI Construction Materials Technologies (TST5878)	1930T0029	TAS 125	2003
		UL 580	2006
		UL 1897	2015
PRI Construction Materials Technologies (TST5878)	1930T0031	TAS 125	2003
		UL 580	2006
		UL 1897	2015
PRI Construction Materials Technologies (TST5878)	1930T0032	TAS 125	2003
		UL 580	2006
		UL 1897	2015

This evaluation report is provided for State of Florida product approval under Rule 61G20-3. The manufacturer shall notify CREEK Technical Services, LLC of any product changes or quality assurance changes throughout the duration for which this report is valid. This evaluation report does not express nor imply warranty, installation, recommended use, or other product attributes that are not specifically addressed herein.

Entity	Report No.	Standard	Year
PRI Construction Materials Technologies (TST5878)	1930T0034.1	TAS 125	2003
		UL 580	2006
		UL 1897	2015
PRI Construction Materials Technologies (TST5878)	1930T0035	UL 580	2006
		UL 1897	2015
PRI Construction Materials Technologies (TST5878)	1930T0036.1	TAS 125	2003
		UL 580	2006
		UL 1897	2015
PRI Construction Materials Technologies (TST5878)	1930T0037.1	TAS 125	2003
		UL 580	2006
		UL 1897	2015
PRI Construction Materials Technologies (TST5878)	1930T0038	TAS 125	2003
		UL 580	2006
		UL 1897	2015
PRI Construction Materials Technologies (TST5878)	1930T0039.2	TAS 125	2003
		UL 580	2006
		UL 1897	2015
PRI Construction Materials Technologies (TST5878)	1930T0040	TAS 125	2003
		UL 580	2006
		UL 1897	2015
PRI Construction Materials Technologies (TST5878)	1930T0042	FM 4471	1992
PRI Construction Materials Technologies (TST5878)	1930T0045	UL 580	2006
		UL 1897	2015
PRI Construction Materials Technologies (TST5878)	1930T0046	TAS 125	2003
		UL 580	2006
		UL 1897	2015
PRI Construction Materials Technologies (TST5878)	1930T0048	UL 580	2006
		UL 1897	2015
PRI Construction Materials Technologies (TST5878)	1930T0055	UL 580	2006
		UL 1897	2015

This evaluation report is provided for State of Florida product approval under Rule 61G20-3. The manufacturer shall notify CREEK Technical Services, LLC of any product changes or quality assurance changes throughout the duration for which this report is valid. This evaluation report does not express nor imply warranty, installation, recommended use, or other product attributes that are not specifically addressed herein.

PRODUCT DESCRIPTION

TCM-LOK 1 in.	**Profile:**	1 in. snap lock seam; Max.16 in. coverage
	Description:	Non-structural, snap lock standing seam roof panel with 7/8 in. slotted nail strip
	Material:	Min. 26 ga. (F_y = min. 50 ksi) ASTM A653 G90, ASTM A792 AZ50 steel coated with Fluropon® or WeatherXL or ASTM A792 AZ55 steel; or Min. 0.032in. (F_y = min. 25 ksi) ASTM B209, 3105 H22 aluminum coated with Fluropon®; Shall conform with FBC Section 1507.4.3
TCM-LOK 1.5 in.	**Profile:**	1.5 in. snap lock seam; Max. 15 in. coverage
	Description:	Non-structural, snap lock standing seam roof panel with 7/8 in. slotted nail strip
	Material:	Min. 24 ga. (F_y = min. 50 ksi) ASTM A653 G90, ASTM A792 AZ50 steel coated with Fluropon® or WeatherXL or ASTM A792 AZ55 steel; Shall conform with FBC Section 1507.4.3
	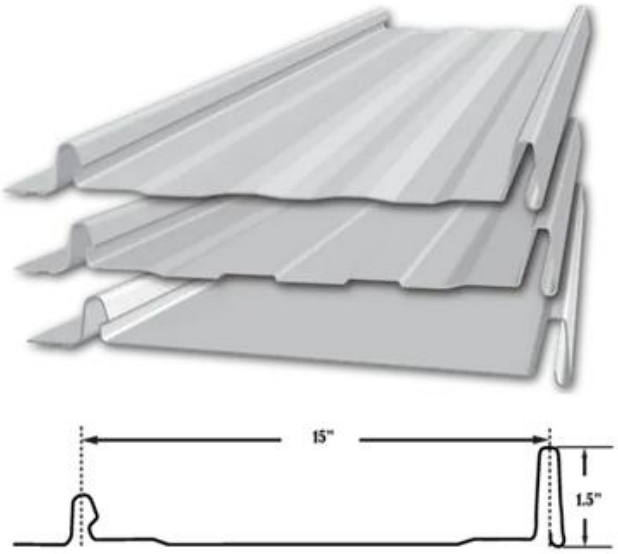	

This evaluation report is provided for State of Florida product approval under Rule 61G20-3. The manufacturer shall notify CREEK Technical Services, LLC of any product changes or quality assurance changes throughout the duration for which this report is valid. This evaluation report does not express nor imply warranty, installation, recommended use, or other product attributes that are not specifically addressed herein.

1.5 SL-LOK	**Profile:**	1.5 in. snap lock seam; Max. 15.5 in. coverage
	Description:	Non-structural, snap lock standing seam roof panel
	Material:	Min. 24 ga. (F_y = min. 50 ksi) ASTM A653 G90, ASTM A792 AZ50 steel coated with Fluropon® or WeatherXL or ASTM A792 AZ55 steel; or Min. 0.032 in. (F_y = min. 25 ksi) ASTM B209, 3105 H24 aluminum coated with Fluropon®; Shall conform with FBC Section 1507.4.3

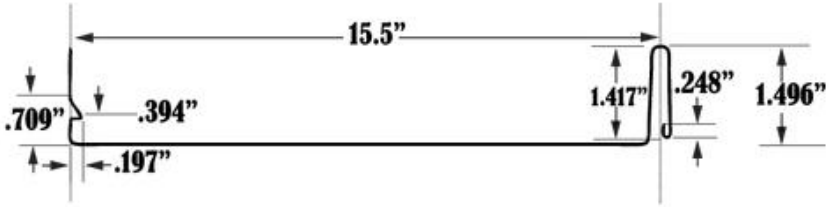

1.75 SS-LOK	**Profile:**	1.75 in. snap lock standing seam; Max. 18 in. coverage
	Description:	Non-structural, snap lock standing seam roof panel
	Material:	Min. 24 ga. (F_y = min. 50 ksi) ASTM A653 G90, ASTM A792 AZ50 steel coated with Fluropon® or WeatherXL or ASTM A792 AZ55 steel; or Min. 0.040 in. (F_y = min. 25 ksi)ASTM B209, 3104 H22 aluminum coated with Fluropon®; Shall conform with FBC Section 1507.4.3

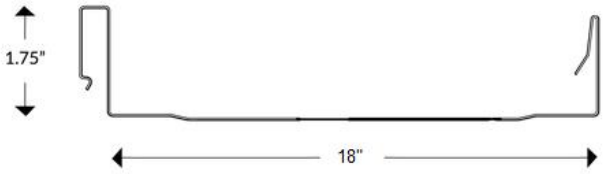

This evaluation report is provided for State of Florida product approval under Rule 61G20-3. The manufacturer shall notify CREEK Technical Services, LLC of any product changes or quality assurance changes throughout the duration for which this report is valid. This evaluation report does not express nor imply warranty, installation, recommended use, or other product attributes that are not specifically addressed herein.

1.5 MS-LOK	**Profile:**	1.5 in. mechanical seam; Max. 16 in. coverage
	Description:	Non-structural, standing seam roof panel; 180° double lock mechanical seam
	Material:	Min. 24 ga. (F_y = min. 50 ksi) ASTM A653 G90, ASTM A792 AZ50 steel coated with Fluropon® or WeatherXL or ASTM A792 AZ55 steel; Shall conform with FBC Section 1507.4.3
2 MS-LOK	**Profile:**	2 in. mechanical seam; Max. 18.75 in. coverage
	Description:	Non-structural, standing seam roof panel; 180° double lock mechanical seam
	Material:	Min. 24 ga. (F_y = min. 50 ksi) ASTM A653 G90, ASTM A792 AZ50 steel coated with Fluropon® or WeatherXL or ASTM A792 AZ55 steel; Shall conform with FBC Section 1507.4.3

This evaluation report is provided for State of Florida product approval under Rule 61G20-3. The manufacturer shall notify CREEK Technical Services, LLC of any product changes or quality assurance changes throughout the duration for which this report is valid. This evaluation report does not express nor imply warranty, installation, recommended use, or other product attributes that are not specifically addressed herein.

5V	**Profile:**	3/8 in. ribs at 12 in. o.c.; 24 in. coverage
	Description:	Non-structural, through fastened roof panel
	Material:	Min. 26 ga. (F_y = min. 50 ksi) ASTM A653 G90, ASTM A792 AZ50 steel coated with Fluropon® or WeatherXL or ASTM A792 AZ55 steel; or Min. 0.032 in. (F_y = min. 27 ksi) ASTM B209, 3105 H22 aluminum coated with Fluropon®; Shall conform with FBC Section 1507.4.3
	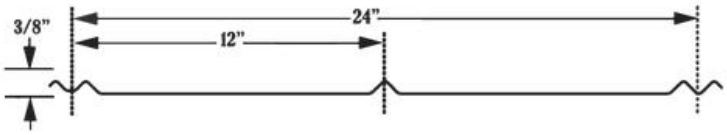	
PBR	**Profile:**	1-1/4 in. ribs at 12 in. o.c.; 36 in. coverage
	Description:	Non-structural, through fastened roof panel
	Material:	Min. 26 ga. (F_y = min. 80 ksi) ASTM A653 G90, ASTM A792 AZ50 steel coated with Fluropon® or WeatherXL or ASTM A792 AZ55 steel; Shall conform with FBC Section 1507.4.3
	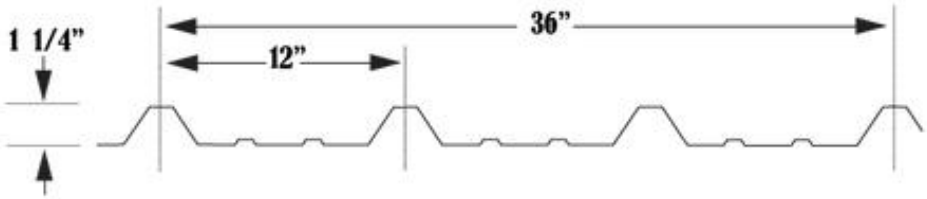	

This evaluation report is provided for State of Florida product approval under Rule 61G20-3. The manufacturer shall notify CREEK Technical Services, LLC of any product changes or quality assurance changes throughout the duration for which this report is valid. This evaluation report does not express nor imply warranty, installation, recommended use, or other product attributes that are not specifically addressed herein.

Ultra Rib	**Profile:**	3/4 in. ribs at 9 in. o.c.; 36 in. coverage
	Description:	Non-structural, through fastened roof panel
	Material:	Min. 29 ga. (F_y = min. 80 ksi) or Min. 26 ga. (F_y = min. 50 ksi) ASTM A653 G90, ASTM A792 AZ50 steel coated with Fluropon® or WeatherXL or ASTM A792 AZ55 steel; Shall conform with FBC Section 1507.4.3

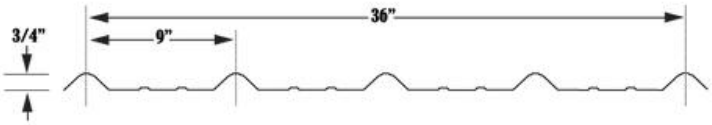

This evaluation report is provided for State of Florida product approval under Rule 61G20-3. The manufacturer shall notify CREEK Technical Services, LLC of any product changes or quality assurance changes throughout the duration for which this report is valid. This evaluation report does not express nor imply warranty, installation, recommended use, or other product attributes that are not specifically addressed herein.

LIMITATIONS

1. This report is not for use in the HVHZ.
2. Fire classification is not within the scope of this evaluation.
3. The roof deck, wood battens and their attachment shall be designed by others to meet the minimum design loads established for components and cladding and in accordance with FBC requirements.
4. Roof slope shall be in accordance with FBC Section 1507.4.2
5. Reroofing shall be in accordance with Section 1511.
6. Installation of the evaluated products shall comply with this report, the FBC, and the manufacturer's published application instructions. Where discrepancies exist between these sources, the more restrictive and FBC compliant installation detail shall prevail.
7. Materials shall conform to FBC Sections 1506 and 1711.
8. FBC Section 1504.3.1.1 is not within the scope of this evaluation. Compliance with FBC Section 1504.3.1.1 shall be established through other *approved* products.
9. All products listed in this report shall be manufactured under a quality assurance program in compliance with Rule 61G20-3.

COMPLIANCE STATEMENT

This report has been prepared in accordance with F.A.C. Rule 61G20-3.

This item has been digitally signed and sealed by Zachary R. Priest, PE, on 8/5/2026.

Printed copies of this document are not considered signed and sealed and the signature must be verified on any electronic copies.

Digitally signed by Zachary R. Priest
2026.08.05 11:24:53 -04'00'

Zachary R. Priest, P.E.
Florida Registration No. 74021
Organization No. ANE9641

CERTIFICATION OF INDEPENDENCE

CREEK Technical Services, LLC does not have, nor will it acquire, a financial interest in any company manufacturing or distributing products under this evaluation.

CREEK Technical Services, LLC is not owned, operated, or controlled by any company manufacturing or distributing products under this evaluation.

Zachary R. Priest, P.E. does not have, nor will acquire, a financial interest in any company manufacturing or distributing products under this evaluation.

Zachary R. Priest, P.E. does not have, nor will acquire, a financial interest in any other entity involved in the approval process of the product.

APPENDICES

1) APPENDIX A – Installation (5 pages)
2) APPENDIX B – Approved Roof Systems (11 pages)
3) APPENDIX C – Design Wind Loads (4 pages)

This evaluation report is provided for State of Florida product approval under Rule 61G20-3. The manufacturer shall notify CREEK Technical Services, LLC of any product changes or quality assurance changes throughout the duration for which this report is valid. This evaluation report does not express nor imply warranty, installation, recommended use, or other product attributes that are not specifically addressed herein.

INSTALLATION

Note - Refer to the ***APPROVED ROOF SYSTEMS*** *section of this report for specific installation details of a selected system.*

Unless otherwise specified in this report the following installation details shall be met for the named products:

Component	Product	Installation Detail
Fasteners	#10-12 Pancake Type A screw	Shall penetrate through the sheathing a minimum 3/8 in. Shall be corrosion resistant in accordance with FBC section 1507.4.4.
	#10-9 PanclipSS MTW low profile head wood screw	
	#10-9 Panclip MTW low profile head wood screw	
	#9-15 Woodgrip HWH wood screw with sealing washer	
	#9-15 Evergrip HWH wood screw with sealing washer	
	#12-8 XG, Pancake head wood screw	
	#12-8 Woodgrip XG HWH wood screw with sealing washer	
	#14-13 PANCLIP SD-L low profile head self-drilling screw	Shall penetrate through the top rib of the steel deck a minimum 3/4 in. Shall be corrosion resistant in accordance with FBC section 1507.4.4.
Bearing Plate	Universal Bearing Plate	4" x 5", 20ga. galvanized steel bearing plate from Direct Metals, Inc.
Clips	1.5 in. DM SL Clip	24 ga. Direct Metals Inc Snaplock HD 450HD Clip, 1-1/4" – 1-1/2" Utility Snaplock Clip, 1.3 in. tall with 3 in, base 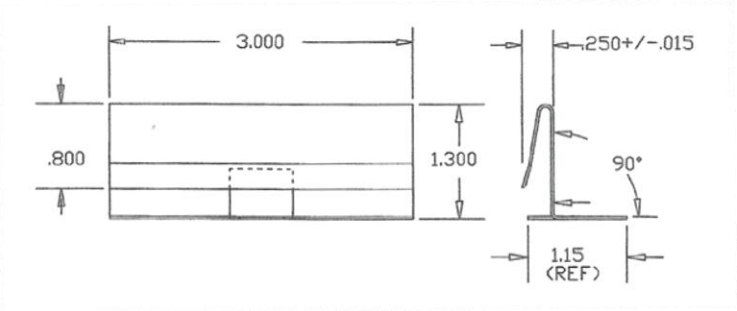
	1.5 in. SL Continuous Clip	24 ga. ASTM A792 AZ55 or 0.032" ASTM B209, 3105 H24 Al; 1.24 in. tall with 1.1 in, base, Min. 10 ft. length 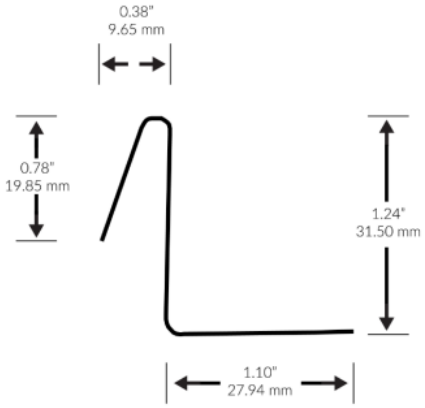

This evaluation report is provided for State of Florida product approval under Rule 61G20-3. The manufacturer shall notify CREEK Technical Services, LLC of any product changes or quality assurance changes throughout the duration for which this report is valid. This evaluation report does not express nor imply warranty, installation, recommended use, or other product attributes that are not specifically addressed herein.

APPENDIX A

Component	Product	Installation Detail
Clips – Cont'd	1.75 in. SFS SL Clip	18 ga. SFS 1-3/4 in. Snap Lock Clip; 1.875 in. tall with 3.75 in. base 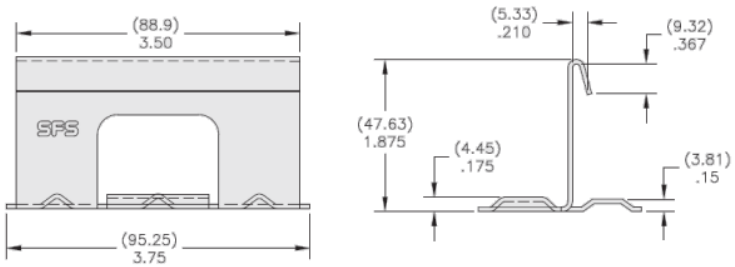
	1.75 in. DM SL Clip	18 ga. Direct Metals Inc 1-3/4 in. Snap Lock Clip; 1-7/8 in. tall with 3-1/2 in. base 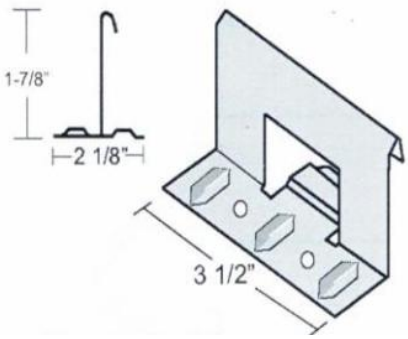
	1.5 in. ML Clip	1-1/2 in. 1-piece expansion clip; 22 ga.vertical tab; 16 ga. base; 4.5 in. long 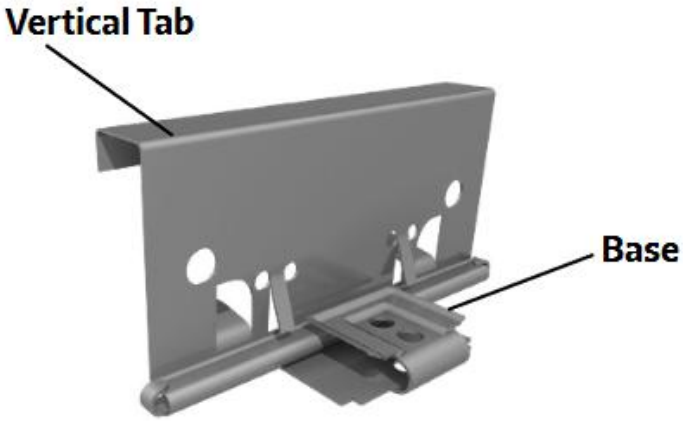

This evaluation report is provided for State of Florida product approval under Rule 61G20-3. The manufacturer shall notify CREEK Technical Services, LLC of any product changes or quality assurance changes throughout the duration for which this report is valid. This evaluation report does not express nor imply warranty, installation, recommended use, or other product attributes that are not specifically addressed herein.

APPENDIX A

Component	Product	Installation Detail
Clips – Cont'd	2 in. ML Clip	2 in. 1-piece expansion clip; 22 ga.vertical tab; 16 ga. base; 4.5 in. long 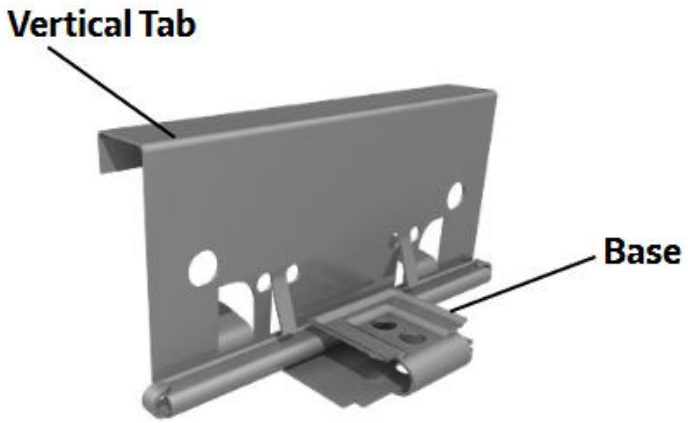
Seam Sealant	TiteBond Weathermaster Metal Roof Sealant	Shall be applied in 1/4 in.- 5/16 in. continuous beads on the male rib along the seam
	Geocel 2300	
	Novaflex Metal Roof Sealant	

This evaluation report is provided for State of Florida product approval under Rule 61G20-3. The manufacturer shall notify CREEK Technical Services, LLC of any product changes or quality assurance changes throughout the duration for which this report is valid. This evaluation report does not express nor imply warranty, installation, recommended use, or other product attributes that are not specifically addressed herein.

Fastening Details	
Nomenclature	Attachment
TCM-LOK	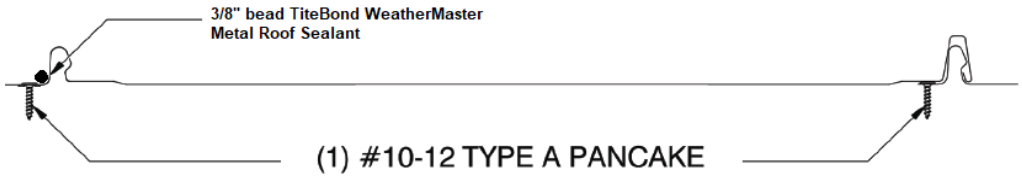
5V Type 1	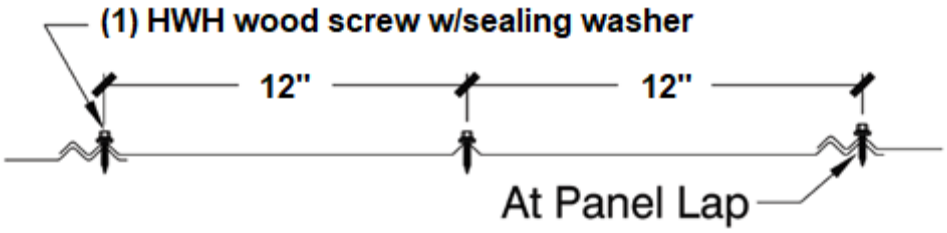
5V Type 2	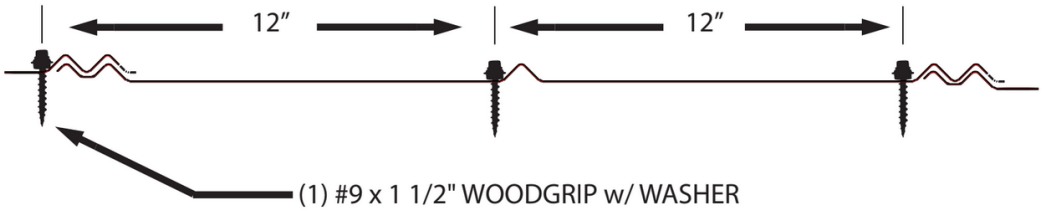
5V Type 3	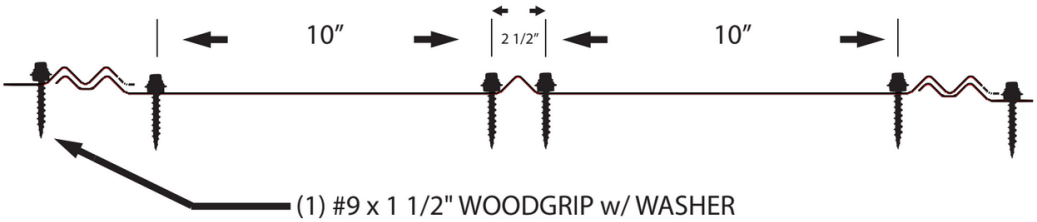
PBR Type 1	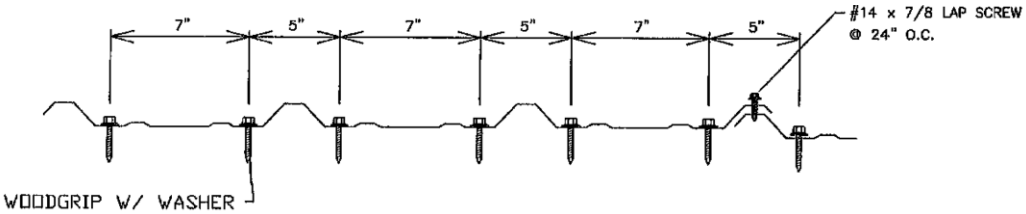

This evaluation report is provided for State of Florida product approval under Rule 61G20-3. The manufacturer shall notify CREEK Technical Services, LLC of any product changes or quality assurance changes throughout the duration for which this report is valid. This evaluation report does not express nor imply warranty, installation, recommended use, or other product attributes that are not specifically addressed herein.

APPENDIX A

Fastening Details	
Nomenclature	Attachment
PBR Type 2	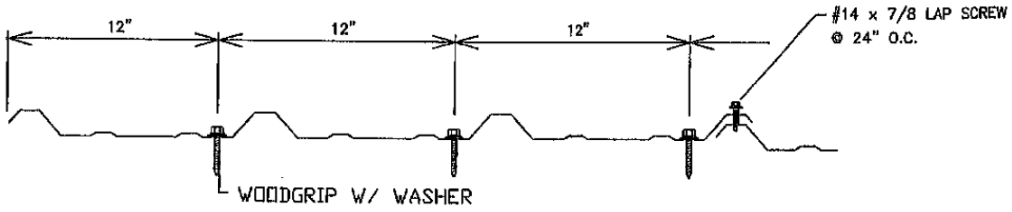
Ultra Rib 1	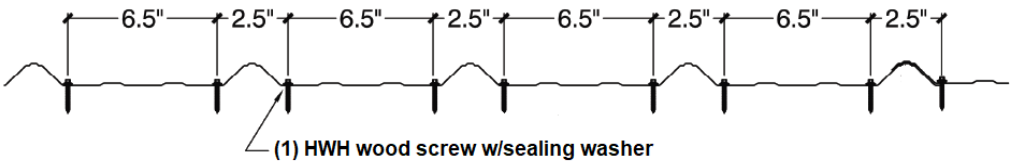
Ultra Rib 2	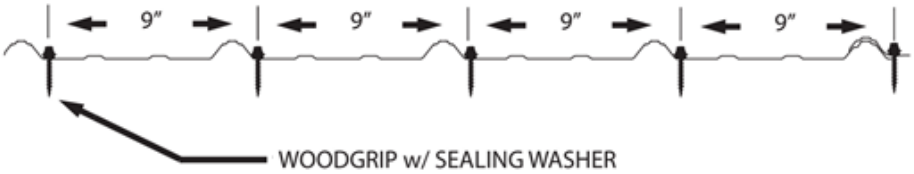
Ultra Rib 3	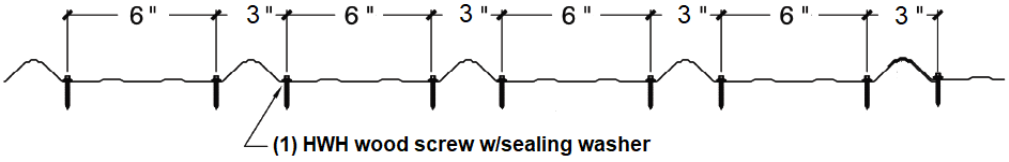
Ultra Rib 4	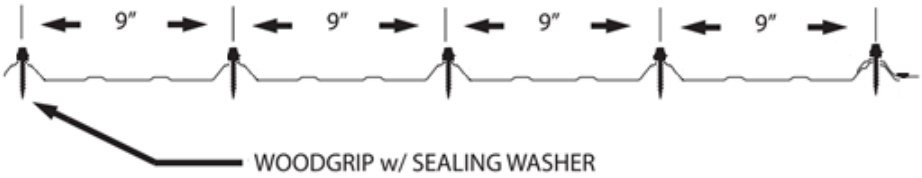

This evaluation report is provided for State of Florida product approval under Rule 61G20-3. The manufacturer shall notify CREEK Technical Services, LLC of any product changes or quality assurance changes throughout the duration for which this report is valid. This evaluation report does not express nor imply warranty, installation, recommended use, or other product attributes that are not specifically addressed herein.

APPROVED ROOF SYSTEMS

The following notes shall be observed when using the assembly tables below.

1. Maximum Design Pressure (*MDP*) was calculated using a 2:1 margin of safety per FBC Section 1504.9.
2. Refer to **LIMITATIONS** and sections of this evaluation when using the table(s) below.
3. Refer to **INSTALLATION** section of this report for installation detail when the information is not explicitly stated for the selected assembly.
4. The on-center (o.c.) spacing given is the maximum allowable attachment spacing for the rated system.
5. Unless otherwise specified, Steel Deck shall be designed by others in accordance with FBC requirements and shall be minimum 22 ga, Wide Rib Deck (Type WR) conforming to ANSI/SDI-RD1.0 & FBC and shall be attached to structural supports spaced maximum 5ft o.c. Panel seams shall be installed perpendicular to the steel deck ribs.
6. Wood Deck shall be designed by others in accordance with FBC requirements. 15/32 CDX plywood shall be minimum 15/32-inch thick, PS 1-19 Grade C-D, Exposure 1, APA Span-Rated plywood sheathing at maximum 24-inch span. 7/16 Oriented Strand Board (OSB) sheathing shall be minimum 7/16-inch thick, PS 2-18, APA Span-Rated, Exposure 1, OSB sheathing at maximum 24-inch span.
7. No. 2 SYP wood battens used over solidly sheathed decks shall be installed parallel to the eave and 90 degrees to the roof trusses/rafters. Wood battens shall be located under each fastener row.
8. Panel fasteners shall be installed through the battens and into the roof deck. Battens shall be secured in place with one (1) min. 0.113 in. x 2-3/8 in. ring shank nail installed max. 12 in. o.c. into the plywood deck.
9. No. 2 SYP wood battens shall be secured in place with one (1) min. 8d x 2-3/8 in. ring shank nail installed max. 4 in. o.c. into the plywood deck or two (2) min. #9 x 3 in. deck screws spaced max. 24 in. o.c. installed through the plywood deck and into the rafters/trusses.
10. No. 2 SYP wood battens shall be secured in place with one (1) min. 8d x 2-1/2 in. ring shank nail installed max. 4 in. o.c. into the plywood deck.
11. No. 2 SYP wood battens shall be secured in place with two (2) min. #9 x 3 in. deck screws spaced max. 24 in. o.c. installed through the plywood deck and into the rafters/trusses.

Roof System Numbers and Definitions	
L1-Al-W-#	Min. 0.032 Al TCM-LOK 1 in. over Wood Deck (New or Existing)
L1-S-W-#	Min. 26ga. steel TCM-LOK 1 in. over Wood Deck (New or Existing)
L1.5-S-W-#	Min. 24ga. steel TCM-LOK 1.5 in. over Wood Deck (New or Existing)
SL-Al-W-#	Min. 0.032 Al 1.5 SL-LOK over Wood Deck (New or Existing)
SL-S-W-#	Min. 24ga. steel 1.5 SL-LOK over Wood Deck (New or Existing)
SS-Al-W-#	Min. 0.040 Al 1.75 SS-LOK over Wood Deck (New or Existing)
SS-S-W-#	Min. 24ga. steel 1.75 SS-LOK over Wood Deck (New or Existing)
SS-S-S-#	Min. 24ga. steel 1.75 SS-LOK over Steel Deck (New or Existing)
1.5MS-W-#	Min. 24ga. steel 1.5 MS-LOK over Wood Deck (New or Existing)
2MS-W-#	Min. 24ga. steel 2 MS-LOK over Wood Deck (New or Existing)
2MS-S-#	Min. 24ga. steel 2 MS-LOK over Steel Deck (New or Existing)
5V-Al-W-#	Min. 0.032 Al 5V over Wood Deck (New or Existing)
5V-S-W-#	Min. 26ga. steel 5V over Wood Deck (New or Existing)
PBR-W-#	Min. 26ga. steel PBR over Wood Deck (New or Existing)
RIB-W-#	Min. 29ga steel Ultra Rib over Wood Deck (New or Existing)

This evaluation report is provided for State of Florida product approval under Rule 61G20-3. The manufacturer shall notify CREEK Technical Services, LLC of any product changes or quality assurance changes throughout the duration for which this report is valid. This evaluation report does not express nor imply warranty, installation, recommended use, or other product attributes that are not specifically addressed herein.

Approved Systems for Min. 0.032 Al 1 in. TCM-LOK over Wood Deck (New or Existing)						
System No.	Deck	Fire Barrier	Underlayment	Roof Panel	Panel Attachment	*MDP* (psf)
L1-Al-W-1	Min. 15/32 CDX plywood	OPTIONAL *Approved* fire barrier	As required per FBC	Min. 0.032 Al TCM-LOK 1 in. Max. 16 in. coverage	*TCM-LOK* attachment with #10-12 Pancake Type A screws spaced 5-1/4 in. o.c.; Seam Sealant (see **INSTALLATION** for list of allowable products) applied to male rib.	**-110**

Approved Systems for Min. 26ga. steel TCM-LOK 1 in. over Wood Deck (New or Existing)						
System No.	Deck	Fire Barrier	Underlayment	Roof Panel	Panel Attachment	*MDP* (psf)
L1-S-W-1	Min. 15/32 B-C plywood with OPTIONAL single layer of asphalt shingles	OPTIONAL *Approved* fire barrier	As required per FBC	Min. 26ga. steel TCM-LOK 1 in. Max. 16 in. coverage	#10-12 Pancake Type A screws installed 5-1/4 in. o.c. along the fastening strip into the pre-punched slots	**-52.5**
L1-S-W-2	Min. 7/16 OSB	OPTIONAL *Approved* fire barrier	As required per FBC	Min. 26ga. steel TCM-LOK 1 in. Max. 16 in. coverage	#12-8 XG screws installed 5-1/4 in. o.c. along the fastening strip into the pre-punched slots	**-101**
L1-S-W-3	Min. 15/32 B-C plywood with OPTIONAL single layer of asphalt shingles	OPTIONAL *Approved* fire barrier	As required per FBC	Min. 24ga. steel TCM-LOK 1 in. Max. 16 in. coverage	#10-12 Pancake Type A screws installed 5-1/4 in. o.c. along the fastening strip into the pre-punched slots	**-116**
L1-S-W-4	Min. 15/32 CDX plywood	OPTIONAL *Approved* fire barrier	As required per FBC	Min. 26ga. steel TCM-LOK 1 in. Max. 16 in. coverage	#10-12 Pancake Type A screws installed 5-1/4 in. o.c. along the fastening strip into the pre-punched slots	**-123.5**
L1-S-W-5	Min. 15/32 CDX plywood	OPTIONAL *Approved* fire barrier	As required per FBC	Min. 24ga. steel TCM-LOK 1 in. Max. 16 in. coverage	*TCM-LOK* attachment with #10-12 Pancake Type A screws spaced 5-1/4 in. o.c.; Seam Sealant (see **INSTALLATION** for list of allowable products) applied to male rib.	**-142.5**

This evaluation report is provided for State of Florida product approval under Rule 61G20-3. The manufacturer shall notify CREEK Technical Services, LLC of any product changes or quality assurance changes throughout the duration for which this report is valid. This evaluation report does not express nor imply warranty, installation, recommended use, or other product attributes that are not specifically addressed herein.

Approved Systems for Min. 24ga. steel TCM-LOK 1.5 in. over Wood Deck (New or Existing)						
System No.	Deck	Fire Barrier	Underlayment	Roof Panel	Panel Attachment	*MDP* (psf)
L1.5-S-W-1	Min. 15/32 CDX plywood	OPTIONAL *Approved* fire barrier	As required per FBC	Min. 24ga. steel TCM-LOK 1.5 in. Max. 15 in. coverage	*TCM-LOK* attachment with #10-12 Pancake Type A screws spaced 5-1/4 in. o.c.; Seam Sealant (see **INSTALLATION** for list of allowable products) applied to male rib.	**-122.5**

Approved Systems Min. 0.032 Al 1.5 SL-LOK over Wood Deck (New or Existing)						
System No.	Deck	Fire Barrier	Underlayment	Roof Panel	Panel Attachment	*MDP* (psf)
SL-Al-W-1	Min. 15/32 CDX plywood	OPTIONAL *Approved* fire barrier	As required per FBC	Min. 0.032 Al 1.5 SL-LOK Max. 15.5 in. coverage	0.032 Al 1.5 in. SL Continuous Clips installed over male leg and fastened 6 in. o.c. with one (1) #10-9 PanclipSS MTW low profile head wood screw; Female portion of snap-lock is then engaged over the continuous clip	**-101**
SL-Al-W-2	Min. 15/32 CDX plywood	OPTIONAL *Approved* fire barrier	As required per FBC	Min. 0.032 Al 1.5 SL-LOK Max. 15.5 in. coverage	0.032 Al 1.5 in. SL Continuous Clips installed over male leg and fastened 6 in. o.c. with one (1) #10-9 PanclipSS MTW low profile head wood screw; 3/8 in. wide, continuous bead of NovaFlex Metal Roof Sealant is applied to backside of continuous clip; Female portion of snap-lock is then engaged over the continuous clip	**-108.5**

Approved Systems for Min. 24ga. steel 1.5 SL-LOK over Wood Deck (New or Existing)						
System No.	Deck	Fire Barrier	Underlayment	Roof Panel	Panel Attachment	*MDP* (psf)
SL-S-W-1	Min. 15/32 CDX plywood	OPTIONAL *Approved* fire barrier	As required per FBC	Min. 24ga. steel 1.5 SL-LOK Max. 15.5 in. coverage	1.5 in. SL Clips spaced 12 in. o.c. at the panel seam secured with two (2) #10-12 Pancake Type A screws per clip	**-75**
SL-S-W-2	Min. 15/32 CDX plywood	OPTIONAL *Approved* fire barrier	As required per FBC	Min. 24ga. steel 1.5 SL-LOK Max. 15.5 in. coverage	1.5 in. SL Clips spaced 6 in. o.c. at the panel seam secured with two (2) #10-12 Pancake Type A screws per clip	**-90**
SL-S-W-3	Min. 15/32 CDX plywood	OPTIONAL *Approved* fire barrier	As required per FBC	Min. 24ga. steel 1.5 SL-LOK Max. 15.5 in. coverage	24 ga. 1.5 in. SL Continuous Clips installed over male leg and fastened 6 in. o.c. with one (1) #10-12 Pancake Type A screws; Female portion of snap-lock is then engaged over the continuous clip	**-146**

This evaluation report is provided for State of Florida product approval under Rule 61G20-3. The manufacturer shall notify CREEK Technical Services, LLC of any product changes or quality assurance changes throughout the duration for which this report is valid. This evaluation report does not express nor imply warranty, installation, recommended use, or other product attributes that are not specifically addressed herein.

Approved Systems for Min. 0.040 Al 1.75 SS-LOK over Wood Deck (New or Existing)						
System No.	Deck	Fire Barrier	Underlayment	Roof Panel	Panel Attachment	*MDP* (psf)
SS-Al-W-1	Min. 15/32 CDX plywood	OPTIONAL *Approved* fire barrier	As required per FBC	Min. 0.040 Al 1.75 SS-LOK Max. 16 in. coverage	1.75 in. SFS SL Clips spaced 16 in. o.c. at the panel seam secured with two (2) #10-9 PanclipSS MTW low profile head screws per clip	**-90**
SS-Al-W-2	Min. 15/32 CDX plywood	OPTIONAL *Approved* fire barrier	As required per FBC	Min. 0.040 Al 1.75 SS-LOK Max. 16 in. coverage	1.75 in. SFS SL Clips spaced 6 in. o.c. at the panel seam secured with two (2) #10-9 PanclipSS MTW low profile head screws per clip	**-120**

Approved Systems for Min. 24ga. steel 1.75 SS-LOK over Wood Deck (New or Existing)						
System No.	Deck	Fire Barrier	Underlayment	Roof Panel	Panel Attachment	*MDP* (psf)
SS-S-W-1	Min. 15/32 CDX plywood	OPTIONAL *Approved* fire barrier	As required per FBC	Min. 24ga. steel 1.75 SS-LOK Max. 18 in. coverage	1.75 in. DM SL Clips spaced 18 in. o.c. at the panel seam secured with two (2) #10-12 Pancake Type A screws per clip	**-105**

Approved Systems for Min. 24ga. steel 1.75 SS-LOK over Steel Deck (New or Existing)							
System No.	Deck	Fire Barrier	Insulation	Underlayment	Roof Panel	Panel Attachment	*MDP* (psf)
SS-S-S-1	Min. 22ga. steel deck	OPTIONAL *Approved* fire barrier	Min. 1-inch *Approved* insulation board	As required per FBC	Min. 24ga. steel 1.75 SS-LOK Max. 18 in. coverage	1.75 in. DM SL Clips and Universal Bearing Plates spaced 24 in. o.c. at the panel seam secured with two (2) #14 PANCLIP SD-L fasteners per clip	**-78.5**

This evaluation report is provided for State of Florida product approval under Rule 61G20-3. The manufacturer shall notify CREEK Technical Services, LLC of any product changes or quality assurance changes throughout the duration for which this report is valid. This evaluation report does not express nor imply warranty, installation, recommended use, or other product attributes that are not specifically addressed herein.

Approved Systems for Min. 24ga. steel 1.5 MS-LOK over Wood Deck (New or Existing)						
System No.	Deck	Fire Barrier	Underlayment	Roof Panel	Panel Attachment	*MDP* (psf)
1.5MS-W-1	Min. 15/32 CDX plywood	OPTIONAL *Approved* fire barrier	As required per FBC	Min. 24ga. steel 1.5 MS-LOK Max. 16 in. coverage	1.5 in. ML Clips spaced 16 in. o.c. at the panel seam secured with two (2) #10-9 x min. 1.5 in. Panclip MTW low profile screws per clip; Panels mechanically seamed with 180° double lock	**-142.5**
1.5MS-W-2	Min. 15/32 CDX plywood	OPTIONAL *Approved* fire barrier	As required per FBC	Min. 24ga. steel 1.5 MS-LOK Max. 16 in. coverage	1.5 in. ML Clips spaced 6 in. o.c. at the panel seam secured with two (2) #10-9 x min. 1.5 in. Panclip MTW low profile screws per clip; Panels mechanically seamed with 180° double lock	**-176**

Approved Systems for Min. 24ga. steel 2 MS-LOK over Wood Deck (New or Existing)						
System No.	Deck	Fire Barrier	Underlayment	Roof Panel	Panel Attachment	*MDP* (psf)
2MS-W-1	Min. 15/32 CDX plywood	OPTIONAL *Approved* fire barrier	As required per FBC	Min. 24ga. steel 2 MS-LOK Max. 18.75 in. coverage	2 in. ML Clips spaced 16 in. o.c. at the panel seam secured with two (2) #10-9 x min. 1.5 in. Panclip MTW low profile screws per clip; Panels mechanically seamed with 180° double lock	**-116.25**
2MS-W-2	Min. 15/32 CDX plywood	OPTIONAL *Approved* fire barrier	As required per FBC	Min. 24ga. steel 2 MS-LOK Max. 18.75 in. coverage	2 in. ML Clips spaced 8 in. o.c. at the panel seam secured with two (2) #10-9 x min. 1.5 in. Panclip MTW low profile screws per clip; Panels mechanically seamed with 180° double lock	**-120**
2MS-W-3	Min. 15/32 CDX plywood	OPTIONAL *Approved* fire barrier	As required per FBC	Min. 24ga. steel 2 MS-LOK Max. 18 in. coverage	2 in. ML Clips spaced 6 in. o.c. at the panel seam secured with two (2) #10-9 x min. 1.5 in. Panclip MTW low profile screws per clip; Panels mechanically seamed with 180° double lock	**-153.5**

This evaluation report is provided for State of Florida product approval under Rule 61G20-3. The manufacturer shall notify CREEK Technical Services, LLC of any product changes or quality assurance changes throughout the duration for which this report is valid. This evaluation report does not express nor imply warranty, installation, recommended use, or other product attributes that are not specifically addressed herein.

Approved Systems for Min. 24ga. steel 2 MS-LOK over Steel Deck (New or Existing)							
System No.	Deck	Fire Barrier	Insulation	Underlayment	Roof Panel	Panel Attachment	*MDP* (psf)
2MS-S-1	Min. 22ga. steel deck	OPTIONAL *Approved* fire barrier	Min. 1-inch *Approved* insulation board	As required per FBC	Min. 24ga. steel 2 MS-LOK Max. 18 in. coverage	2 in. ML Clips and Universal Bearing Plates spaced 24 in. o.c. at the panel seam secured with two (2) #14 PANCLIP SD-L fasteners per clip; Panels mechanically seamed with 180° double lock	**-112.25**
2MS-S-2	Min. 22ga. steel deck	OPTIONAL *Approved* fire barrier	Min. 1-inch *Approved* insulation board	As required per FBC	Min. 24ga. steel 2 MS-LOK Max. 18 in. coverage	2 in. ML Clips and Universal Bearing Plates spaced 6 in. o.c. at the panel seam secured with two (2) #14 PANCLIP SD-L fasteners per clip; Panels mechanically seamed with 180° double lock	**-168.5**

Approved Systems for Min. 0.032 Al 5V Crimp over Wood Deck (New or Existing)							
System No.	Deck	Battens (Note 7)	Fire Barrier	Underlayment	Roof Panel	Panel Attachment	*MDP* (psf)
5V-Al-W-1	Min. 15/32 CDX plywood	-	OPTIONAL *Approved* fire barrier	As required per FBC	Min. 0.032 Al 5V Crimp Max. 24 in. coverage	*5V Type 1* attachment with #9-15 Evergrip screws with sealing washers spaced 9 in. o.c.	**-127.5**
5V-Al-W-2	Min. 15/32 CDX plywood	-	OPTIONAL *Approved* fire barrier	As required per FBC	Min. 0.032 Al 5V Crimp Max. 24 in. coverage	*5V Type 1* attachment with #9-15 Evergrip screws with sealing washers spaced 6 in. o.c.	**-150**

This evaluation report is provided for State of Florida product approval under Rule 61G20-3. The manufacturer shall notify CREEK Technical Services, LLC of any product changes or quality assurance changes throughout the duration for which this report is valid. This evaluation report does not express nor imply warranty, installation, recommended use, or other product attributes that are not specifically addressed herein.

Approved Systems for Min. 26ga. steel 5V Crimp over Wood Deck (New or Existing)							
System No.	Deck	Battens (Note 7)	Fire Barrier	Underlayment	Roof Panel	Panel Attachment	*MDP* (psf)
5V-S-W-1	Min. 15/32 CDX plywood	-	OPTIONAL *Approved* fire barrier	As required per FBC	Min. 26ga. steel, Grade 50 5V Crimp Max. 24 in. coverage	*5V Type 1* attachment with #9-15 Woodgrip screws with sealing washers spaced 16 in. o.c.	**-67.5**
5V-S-W-2	Min. 15/32 B-C plywood with OPTIONAL single layer of asphalt shingles	No. 2 SYP min. 1x4 wood battens secured per Note 9	OPTIONAL *Approved* fire barrier	As required per FBC	Min. 26ga. steel, Grade 80 5V Crimp Max. 24 in. coverage	*5V Type 2* attachment into wood battens with #9-15 x min. 1.5-inch Woodgrip screws with sealing washers spaced 16 in. o.c.	**-78.5**
5V-S-W-3	Min. 15/32 CDX plywood	OPTIONAL No. 2 SYP min. 1x4 wood battens secured per Note 8	OPTIONAL *Approved* fire barrier	As required per FBC	Min. 26ga. steel, Grade 80 5V Crimp Max. 24 in. coverage	*5V Type 1* attachment with #12-8 Woodgrip XG screws with sealing washers spaced 16 in. o.c.	**-86.25**
5V-S-W-4	Min. 15/32 CDX plywood	OPTIONAL No. 2 SYP min. 1x4 wood battens secured per Note 8	OPTIONAL *Approved* fire barrier	As required per FBC	Min. 26ga. steel, Grade 80 5V Crimp Max. 24 in. coverage	*5V Type 1* attachment with #9-15 Woodgrip or #12-8 Woodgrip XG screws with sealing washers spaced 12 in. o.c.	**-90**
5V-S-W-5	Min. 15/32 B-C plywood with OPTIONAL single layer of asphalt shingles	No. 2 SYP min. 1x4 wood battens secured per Note 9	OPTIONAL *Approved* fire barrier	As required per FBC	Min. 26ga. steel, Grade 80 5V Crimp Max. 24 in. coverage	*5V Type 3* attachment into wood battens with #9-15 x min. 1.5-inch Woodgrip screws with sealing washers spaced 16 in. o.c.	**-101**
5V-S-W-6	Min. 15/32 CDX plywood	-	OPTIONAL *Approved* fire barrier	As required per FBC	Min. 26ga. steel, Grade 50 5V Crimp Max. 24 in. coverage	*5V Type 1* attachment with #12-8 Woodgrip XG screws with sealing washers spaced 12 in. o.c.	**-101.25**
5V-S-W-7	Min. 15/32 CDX plywood	-	OPTIONAL *Approved* fire barrier	As required per FBC	Min. 26ga. steel, Grade 50 5V Crimp Max. 24 in. coverage	*5V Type 1* attachment with #9-15 Woodgrip or #12-8 Woodgrip XG screws with sealing washers spaced 6 in. o.c.	**-120**

This evaluation report is provided for State of Florida product approval under Rule 61G20-3. The manufacturer shall notify CREEK Technical Services, LLC of any product changes or quality assurance changes throughout the duration for which this report is valid. This evaluation report does not express nor imply warranty, installation, recommended use, or other product attributes that are not specifically addressed herein.

Approved Systems for Min. 26ga. steel 5V Crimp over Wood Deck (New or Existing)							
System No.	Deck	Battens (Note 7)	Fire Barrier	Underlayment	Roof Panel	Panel Attachment	*MDP* (psf)
5V-S-W-8	Min. 15/32 CDX plywood	OPTIONAL No. 2 SYP min. 1x4 wood battens secured per Note 8	OPTIONAL *Approved* fire barrier	As required per FBC	Min. 26ga. steel, Grade 80 5V Crimp Max. 24 in. coverage	*5V Type 1* attachment with #12-8 Woodgrip XG screws with sealing washers spaced 9 in. o.c.	**-120**
5V-S-W-9	Min. 15/32 CDX plywood	OPTIONAL No. 2 SYP min. 1x4 wood battens secured per Note 8	OPTIONAL *Approved* fire barrier	As required per FBC	Min. 26ga. steel, Grade 80 5V Crimp Max. 24 in. coverage	*5V Type 1* attachment with #9-15 Woodgrip or #12-8 Woodgrip XG screws with sealing washers spaced 6 in. o.c.	**-135**

Approved Systems for Min. 26ga. steel PBR over Wood Deck (New or Existing)							
System No.	Deck	Battens (Note 7)	Fire Barrier	Underlayment	Roof Panel	Panel Attachment	*MDP* (psf)
PBR-W-1	Min. 15/32 B-C plywood	-	OPTIONAL *Approved* fire barrier	As required per FBC	Min. 26ga.steel, Grade 80 PBR Max. 36 in. coverage	*PBR Type 2* attachment with #9-15 Woodgrip screws with sealing washers spaced 24 in. o.c.	**-63.5**
PBR-W-2	Min. 15/32 B-C plywood with OPTIONAL single layer of asphalt shingles	No. 2 SYP min. 1x4 wood battens secured per Note 9	OPTIONAL *Approved* fire barrier	As required per FBC	Min. 26ga.steel, Grade 80 PBR Max. 36 in. coverage	*PBR Type 2* attachment intro wood battens with #9-15 x min. 1.5-inch Woodgrip screws with sealing washers spaced 24 in. o.c.	**-71**
PBR-W-3	Min. 15/32 B-C plywood with OPTIONAL single layer of asphalt shingles	No. 2 SYP min. 1x4 wood battens secured per Note 9	OPTIONAL *Approved* fire barrier	As required per FBC	Min. 26ga.steel, Grade 80 PBR Max. 36 in. coverage	*PBR Type 1* attachment into wood battens with #9-15 x min. 1.5-inch Woodgrip screws with sealing washers spaced 24 in. o.c.	**-78.5**

This evaluation report is provided for State of Florida product approval under Rule 61G20-3. The manufacturer shall notify CREEK Technical Services, LLC of any product changes or quality assurance changes throughout the duration for which this report is valid. This evaluation report does not express nor imply warranty, installation, recommended use, or other product attributes that are not specifically addressed herein.

Approved Systems for Min. 26ga. steel PBR over Wood Deck (New or Existing)							
System No.	Deck	Battens (Note 7)	Fire Barrier	Underlayment	Roof Panel	Panel Attachment	*MDP* (psf)
PBR-W-1	Min. 15/32 CDX plywood	OPTIONAL No. 2 SYP min. 1x4 wood battens secured per Note 8	OPTIONAL *Approved* fire barrier	As required per FBC	Min. 26ga.steel, Grade 80 PBR Max. 36 in. coverage	*PBR Type 1* attachment with #12-8 Woodgrip XG screws with sealing washers spaced 24 in. o.c.	**-86**
PBR-W-2	Min. 15/32 B-C plywood	-	OPTIONAL *Approved* fire barrier	As required per FBC	Min. 26ga.steel, Grade 80 PBR Max. 36 in. coverage	*PBR Type 1* attachment with #9-15 Woodgrip screws with sealing washers spaced 24 in. o.c.	**-93.5**
PBR-W-3	Min. 15/32 CDX plywood	OPTIONAL No. 2 SYP min. 1x4 wood battens secured per Note 8	OPTIONAL *Approved* fire barrier	As required per FBC	Min. 26ga.steel, Grade 80 PBR Max. 36 in. coverage	*PBR Type 1* attachment with #12-8 Woodgrip XG screws with sealing washers spaced 12 in. o.c.	**-153.5**

Approved Systems for Min. 29ga steel Ultra Rib over Wood Deck (New or Existing)							
System No.	Deck	Battens (Note 7)	Fire Barrier	Underlayment	Roof Panel	Panel Attachment	*MDP* (psf)
RIB-W-1	Min. 7/16 OSB with OPTIONAL single layer of asphalt shingles	-	OPTIONAL *Approved* fire barrier	As required per FBC	Min. 29ga. steel Ultra Rib Max. 36 in. coverage	*Ultra Rib 2* attachment with #12-8 Woodgrip XG screws with sealing washers spaced 24 in. o.c	**-41.7**
RIB-W-2	Min. 15/32 B-C plywood with OPTIONAL single layer of asphalt shingles	No. 2 SYP min. 1x4 wood battens secured per Note 10	OPTIONAL *Approved* fire barrier	As required per FBC	Min. 29ga. steel Ultra Rib Max. 36 in. coverage	*Ultra Rib 4* attachment into wood battens with #9-15 x min. 2-inch Woodgrip screws with sealing washers spaced 24 in. o.c	**-52.5**

This evaluation report is provided for State of Florida product approval under Rule 61G20-3. The manufacturer shall notify CREEK Technical Services, LLC of any product changes or quality assurance changes throughout the duration for which this report is valid. This evaluation report does not express nor imply warranty, installation, recommended use, or other product attributes that are not specifically addressed herein.

Approved Systems for Min. 29ga steel Ultra Rib over Wood Deck (New or Existing)							
System No.	Deck	Battens (Note 7)	Fire Barrier	Underlayment	Roof Panel	Panel Attachment	*MDP* (psf)
RIB-W-3	Min. 15/32 CDX plywood with OPTIONAL single layer of asphalt shingles	-	OPTIONAL *Approved* fire barrier	As required per FBC	Min. 29ga. steel Ultra Rib Max. 36 in. coverage	*Ultra Rib 4* attachment with #9-15 x min. 2-inch Woodgrip screws with sealing washers spaced 24 in. o.c	**-56**
RIB-W-4	Min. 15/32 B-C plywood with OPTIONAL single layer of asphalt shingles	-	OPTIONAL *Approved* fire barrier	As required per FBC	Min. 29ga. steel Ultra Rib Max. 36 in. coverage	*Ultra Rib 2* attachment with #9-15 Woodgrip screws with sealing washers spaced 24 in. o.c	**-63.5**
RIB-W-5	Min. 15/32 CDX plywood with OPTIONAL single layer of asphalt shingles	No. 2 SYP min. 1x4 wood battens secured per Note 8	OPTIONAL *Approved* fire barrier	As required per FBC	Min. 29ga. steel Ultra Rib Max. 36 in. coverage	*Ultra Rib 2* attachment with #9-15 Woodgrip screws with sealing washers spaced 24 in. o.c	**-67.5**
RIB-W-6	Min. 15/32 3-ply plywood with OPTIONAL single layer of asphalt shingles	No. 2 SYP min. 1x4 wood battens secured per Note 10	OPTIONAL *Approved* fire barrier	As required per FBC	Min. 29ga. steel Ultra Rib Max. 36 in. coverage	*Ultra Rib 2* attachment into wood battens with #9-15 x min. 1.5-inch Woodgrip screws with sealing washers spaced 24 in. o.c	**-78.5**
RIB-W-7	Min. 15/32 3-ply plywood with OPTIONAL single layer of asphalt shingles	No. 2 SYP min. 1x4 wood battens secured per note 10	OPTIONAL *Approved* fire barrier	As required per FBC	Min. 29ga. steel Ultra Rib Max. 36 in. coverage	*Ultra Rib 3* attachment into wood battens with #9-15 x min. 1.5-inch Woodgrip screws with sealing washers spaced 24 in. o.c	**-86**
RIB-W-8	Min. 15/32 CDX plywood	No. 2 SYP min. 1x4 wood battens secured per Note 11	OPTIONAL *Approved* fire barrier	As required per FBC	Min. 29ga. steel Ultra Rib Max. 36 in. coverage	*Ultra Rib 2* attachment into wood battens with #9-15 x min. 1.5-inch Woodgrip screws with sealing washers spaced 24 in. o.c	**-93.5**

This evaluation report is provided for State of Florida product approval under Rule 61G20-3. The manufacturer shall notify CREEK Technical Services, LLC of any product changes or quality assurance changes throughout the duration for which this report is valid. This evaluation report does not express nor imply warranty, installation, recommended use, or other product attributes that are not specifically addressed herein.

APPENDIX B

Approved Systems for Min. 29ga steel Ultra Rib over Wood Deck (New or Existing)							
System No.	Deck	Battens (Note 7)	Fire Barrier	Underlayment	Roof Panel	Panel Attachment	*MDP* (psf)
RIB-W-9	Min. 15/32 B-C plywood with OPTIONAL single layer of asphalt shingles	-	OPTIONAL *Approved* fire barrier	As required per FBC	Min. 29ga. steel Ultra Rib Max. 36 in. coverage	*Ultra Rib 3* attachment with #9-15 Woodgrip screws with sealing washers spaced 24 in. o.c	**-101**
RIB-W-10	Min. 15/32 CDX plywood	OPTIONAL No. 2 SYP min. 1x4 wood battens secured per Note 8	OPTIONAL *Approved* fire barrier	As required per FBC	Min. 26ga. steel Ultra Rib Max. 36 in. coverage	*Ultra Rib 1* attachment with #12-8 Woodgrip XG screws with sealing washers spaced 24 in. o.c	**-116.25**
RIB-W-11	Min. 7/16 OSB with OPTIONAL single layer of asphalt shingles	-	OPTIONAL *Approved* fire barrier	As required per FBC	Min. 29ga. steel Ultra Rib Max. 36 in. coverage	*Ultra Rib 3* attachment with #12-8 Woodgrip XG screws with sealing washers spaced 12 in. o.c	**-123.5**
RIB-W-12	Min. 15/32 CDX plywood	OPTIONAL No. 2 SYP min. 1x4 wood battens secured per Note 8	OPTIONAL *Approved* fire barrier	As required per FBC	Min. 26ga. steel Ultra Rib Max. 36 in. coverage	*Ultra Rib 1* attachment with #9-15 Woodgrip screws with sealing washers spaced 12 in. o.c	**-135**
RIB-W-13	Min. 15/32 B-C plywood with OPTIONAL single layer of asphalt shingles	No. 2 SYP min. 1x4 wood battens secured per Note 10	OPTIONAL *Approved* fire barrier	As required per FBC	Min. 29ga. steel Ultra Rib Max. 36 in. coverage	*Ultra Rib 4* attachment into wood battens with #9-15 x min. 2-inch Woodgrip screws with sealing washers spaced 6 in. o.c	**-131**
RIB-W-14	Min. 15/32 CDX plywood	No. 2 SYP min. 1x4 wood battens secured per Note 11	OPTIONAL *Approved* fire barrier	As required per FBC	Min. 29ga. steel Ultra Rib Max. 36 in. coverage	*Ultra Rib 3* attachment into wood battens with #9-15 x min. 1.5-inch Woodgrip screws with sealing washers spaced 24 in. o.c	**-138.5**

This evaluation report is provided for State of Florida product approval under Rule 61G20-3. The manufacturer shall notify CREEK Technical Services, LLC of any product changes or quality assurance changes throughout the duration for which this report is valid. This evaluation report does not express nor imply warranty, installation, recommended use, or other product attributes that are not specifically addressed herein.

DESIGN WIND LOADS

The following tables provide design wind loads for components and cladding in accordance with Section 1609 of the FBC and ASCE 7-22 under the following provisions:

1. Wind speeds for risk category I, II, III, and IV buildings shall be as defined in Section 1609 of the FBC.
2. Exposure B, C and D shall be as defined in section 1609 of the FBC.
3. Design wind load provided only for gable/hip roofs with roof slopes between 2:12 and 12:12.
4. All calculations are based on an effective wind area of 10-ft^2 or less.
5. Topographic factors such as escarpments or hills have been excluded from the analysis.
6. Overhangs have been excluded from the analysis.
7. Wind directionality factor, K_d = 0.85
8. Ground elevation factor, K_e = 1.0
9. V_{ult} is shown in the tables below. Design wind loads are calculated using $V_{asd} = V_{ult}\sqrt{0.6}$ per 1609.3.1.
10. Zone 2 applies to Zone 3 for Hip Roofs where the slope is between 2:12 and 6.1:12.
11. Projects with mean roof heights greater than 60-ft shall be evaluated by a licensed design professional.
12. Zones 1, 2, and 3 shall be defined as shown below. Dimension "a" shall be 10% of the least horizontal dimension or (0.4 x *Mean Roof Height)*, whichever is smaller, but not less than either 4% of the least horizontal dimension or 3ft.

Gable Roofs		Hip Roofs
Slopes 2:12 to 6.1:12	**Slopes >6.1:12 to 12:12**	**Slopes 2:12 to 12:12**
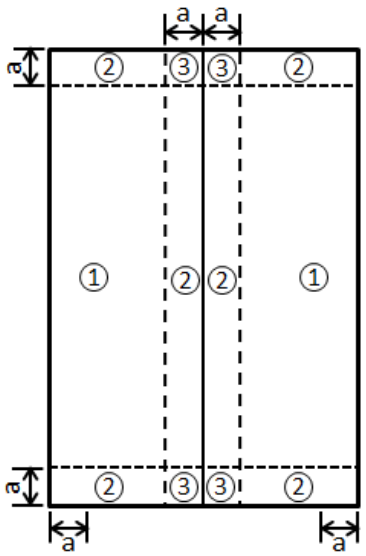	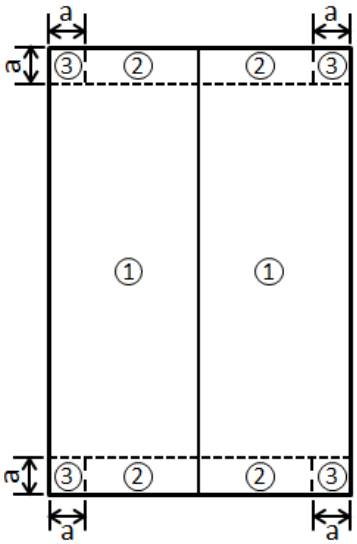	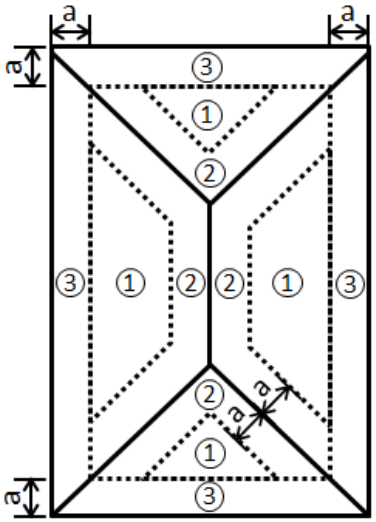

This evaluation report is provided for State of Florida product approval under Rule 61G20-3. The manufacturer shall notify CREEK Technical Services, LLC of any product changes or quality assurance changes throughout the duration for which this report is valid. This evaluation report does not express nor imply warranty, installation, recommended use, or other product attributes that are not specifically addressed herein.

APPENDIX C

Gable/Hip Roofs in **Exposure B** (Roof slope between 2:12 and 12:12)											
Building Type	Zone	Mean Roof Height (ft)	Basic Wind Speed (mph)								
			120	130	140	150	160	170	180	190	200
Enclosed/ Partially Open	1	20	-25.4	-29.8	-34.6	-39.7	-45.2	-51.0	-57.2	-63.7	-70.6
		25	-26.9	-31.6	-36.6	-42.0	-47.8	-54.0	-60.5	-67.5	-74.7
		30	-28.3	-33.2	-38.5	-44.1	-50.2	-56.7	-63.6	-70.8	-78.5
		40	-30.5	-35.8	-41.5	-47.7	-54.2	-61.2	-68.6	-76.5	-84.7
		50	-32.4	-38.0	-44.1	-50.6	-57.6	-65.0	-72.8	-81.2	-89.9
		60	-34.0	-39.9	-46.3	-53.1	-60.4	-68.2	-76.5	-85.2	-94.4
	2	20	-33.6	-39.4	-45.7	-52.5	-59.7	-67.4	-75.5	-84.2	-93.3
		25	-35.5	-41.7	-48.4	-55.5	-63.2	-71.3	-80.0	-89.1	-98.7
		30	-37.3	-43.8	-50.8	-58.3	-66.3	-74.9	-84.0	-93.6	-103.7
		40	-40.3	-47.3	-54.9	-63.0	-71.6	-80.9	-90.7	-101.0	-111.9
		50	-42.8	-50.2	-58.2	-66.8	-76.0	-85.8	-96.2	-107.2	-118.8
		60	-44.9	-52.7	-61.1	-70.2	-79.8	-90.1	-101.0	-112.6	-124.7
	3	20	-44.1	-51.7	-60.0	-68.8	-78.3	-88.4	-99.1	-110.5	-122.4
		25	-46.7	-54.8	-63.5	-72.9	-82.9	-93.6	-105.0	-117.0	-129.6
		30	-49.0	-57.5	-66.7	-76.5	-87.1	-98.3	-110.2	-122.8	-136.1
		40	-52.9	-62.1	-72.0	-82.6	-94.0	-106.1	-119.0	-132.6	-146.9
		50	-56.1	-65.9	-76.4	-87.7	-99.8	-112.6	-126.3	-140.7	-155.9
		60	-58.9	-69.2	-80.2	-92.1	-104.8	-118.3	-132.6	-147.7	-163.7
Partially Enclosed	1	20	-29.7	-34.9	-40.5	-46.5	-52.8	-59.7	-66.9	-74.5	-82.6
		25	-31.5	-36.9	-42.8	-49.2	-56.0	-63.2	-70.8	-78.9	-87.4
		30	-33.0	-38.8	-45.0	-51.6	-58.7	-66.3	-74.4	-82.8	-91.8
		40	-35.7	-41.9	-48.6	-55.8	-63.4	-71.6	-80.3	-89.4	-99.1
		50	-37.9	-44.4	-51.5	-59.2	-67.3	-76.0	-85.2	-94.9	-105.2
		60	-39.8	-46.7	-54.1	-62.1	-70.7	-79.8	-89.4	-99.7	-110.4
	2	20	-37.9	-44.5	-51.6	-59.2	-67.4	-76.0	-85.2	-95.0	-105.2
		25	-40.1	-47.1	-54.6	-62.7	-71.3	-80.5	-90.3	-100.6	-111.4
		30	-42.1	-49.4	-57.3	-65.8	-74.9	-84.5	-94.8	-105.6	-117.0
		40	-45.5	-53.4	-61.9	-71.1	-80.8	-91.3	-102.3	-114.0	-126.3
		50	-48.3	-56.6	-65.7	-75.4	-85.8	-96.9	-108.6	-121.0	-134.1
		60	-50.7	-59.5	-69.0	-79.2	-90.1	-101.7	-114.0	-127.0	-140.7
	3	20	-48.4	-56.8	-65.8	-75.6	-86.0	-97.1	-108.8	-121.3	-134.4
		25	-51.2	-60.1	-69.7	-80.0	-91.1	-102.8	-115.3	-128.4	-142.3
		30	-53.8	-63.1	-73.2	-84.0	-95.6	-107.9	-121.0	-134.8	-149.4
		40	-58.1	-68.1	-79.0	-90.7	-103.2	-116.5	-130.6	-145.6	-161.3
		50	-61.6	-72.3	-83.9	-96.3	-109.6	-123.7	-138.7	-154.5	-171.2
		60	-64.7	-75.9	-88.1	-101.1	-115.0	-129.8	-145.6	-162.2	-179.7

This evaluation report is provided for State of Florida product approval under Rule 61G20-3. The manufacturer shall notify CREEK Technical Services, LLC of any product changes or quality assurance changes throughout the duration for which this report is valid. This evaluation report does not express nor imply warranty, installation, recommended use, or other product attributes that are not specifically addressed herein.

APPENDIX C

Gable/Hip Roofs in **Exposure C** (Roof slope between 2:12 and 12:12)											
Building Type	Zone	Mean Roof Height (ft)	Basic Wind Speed (mph)								
			120	130	140	150	160	170	180	190	200
Enclosed/ Partially Open	1	20	-36.9	-43.3	-50.2	-57.6	-65.6	-74.0	-83.0	-92.5	-102.5
		25	-38.7	-45.4	-52.7	-60.5	-68.8	-77.7	-87.1	-97.1	-107.6
		30	-40.2	-47.2	-54.7	-62.8	-71.4	-80.7	-90.4	-100.8	-111.6
		40	-42.6	-50.0	-58.0	-66.6	-75.8	-85.5	-95.9	-106.8	-118.4
		50	-44.6	-52.3	-60.7	-69.7	-79.3	-89.5	-100.4	-111.8	-123.9
		60	-46.3	-54.3	-63.0	-72.3	-82.3	-92.9	-104.2	-116.1	-128.6
	2	20	-48.7	-57.2	-66.3	-76.1	-86.6	-97.8	-109.6	-122.2	-135.4
		25	-51.2	-60.0	-69.6	-79.9	-90.9	-102.7	-115.1	-128.2	-142.1
		30	-53.1	-62.3	-72.3	-83.0	-94.4	-106.6	-119.5	-133.1	-147.5
		40	-56.3	-66.1	-76.6	-88.0	-100.1	-113.0	-126.7	-141.1	-156.4
		50	-58.9	-69.2	-80.2	-92.1	-104.8	-118.3	-132.6	-147.7	-163.7
		60	-61.2	-71.8	-83.2	-95.6	-108.7	-122.7	-137.6	-153.3	-169.9
	3	20	-64.0	-75.1	-87.1	-99.9	-113.7	-128.4	-143.9	-160.3	-177.7
		25	-67.1	-78.8	-91.4	-104.9	-119.4	-134.7	-151.1	-168.3	-186.5
		30	-69.7	-81.8	-94.8	-108.9	-123.9	-139.8	-156.8	-174.7	-193.6
		40	-73.9	-86.7	-100.6	-115.5	-131.4	-148.3	-166.3	-185.2	-205.3
		50	-77.3	-90.8	-105.3	-120.8	-137.5	-155.2	-174.0	-193.9	-214.8
		60	-80.3	-94.2	-109.3	-125.4	-142.7	-161.1	-180.6	-201.2	-223.0
Partially Enclosed	1	20	-43.2	-50.6	-58.7	-67.4	-76.7	-86.6	-97.1	-108.2	-119.9
		25	-45.3	-53.2	-61.6	-70.8	-80.5	-90.9	-101.9	-113.5	-125.8
		30	-47.0	-55.2	-64.0	-73.5	-83.6	-94.3	-105.8	-117.8	-130.6
		40	-49.9	-58.5	-67.9	-77.9	-88.6	-100.0	-112.2	-125.0	-138.5
		50	-52.2	-61.2	-71.0	-81.5	-92.8	-104.7	-117.4	-130.8	-144.9
		60	-54.2	-63.6	-73.7	-84.6	-96.3	-108.7	-121.8	-135.8	-150.4
	2	20	-55.0	-64.5	-74.9	-85.9	-97.8	-110.4	-123.7	-137.9	-152.8
		25	-57.7	-67.7	-78.6	-90.2	-102.6	-115.8	-129.9	-144.7	-160.3
		30	-59.9	-70.3	-81.6	-93.6	-106.5	-120.2	-134.8	-150.2	-166.4
		40	-63.5	-74.6	-86.5	-99.3	-112.9	-127.5	-143.0	-159.3	-176.5
		50	-66.5	-78.0	-90.5	-103.9	-118.2	-133.5	-149.6	-166.7	-184.7
		60	-69.0	-81.0	-93.9	-107.8	-122.7	-138.5	-155.3	-173.0	-191.7
	3	20	-70.2	-82.4	-95.6	-109.7	-124.8	-140.9	-158.0	-176.0	-195.1
		25	-73.7	-86.5	-100.3	-115.2	-131.0	-147.9	-165.8	-184.8	-204.7
		30	-76.5	-89.8	-104.1	-119.5	-136.0	-153.5	-172.1	-191.8	-212.5
		40	-81.1	-95.2	-110.4	-126.8	-144.2	-162.8	-182.5	-203.4	-225.4
		50	-84.9	-99.7	-115.6	-132.7	-150.9	-170.4	-191.0	-212.9	-235.9
		60	-88.1	-103.4	-120.0	-137.7	-156.7	-176.9	-198.3	-220.9	-244.8

This evaluation report is provided for State of Florida product approval under Rule 61G20-3. The manufacturer shall notify CREEK Technical Services, LLC of any product changes or quality assurance changes throughout the duration for which this report is valid. This evaluation report does not express nor imply warranty, installation, recommended use, or other product attributes that are not specifically addressed herein.

APPENDIX C

Gable/Hip Roofs in **Exposure D** (Roof slope between 2:12 and 12:12)											
Building Type	Zone	Mean Roof Height (ft)	Basic Wind Speed (mph)								
			120	130	140	150	160	170	180	190	200
Enclosed/ Partially Open	1	20	-44.7	-52.4	-60.8	-69.8	-79.4	-89.7	-100.5	-112.0	-124.1
		25	-46.4	-54.4	-63.1	-72.4	-82.4	-93.1	-104.3	-116.2	-128.8
		30	-47.9	-56.2	-65.1	-74.8	-85.1	-96.1	-107.7	-120.0	-132.9
		40	-50.3	-59.1	-68.5	-78.6	-89.4	-101.0	-113.2	-126.1	-139.8
		50	-52.3	-61.4	-71.2	-81.7	-93.0	-105.0	-117.7	-131.1	-145.3
		60	-54.0	-63.4	-73.5	-84.4	-96.0	-108.4	-121.5	-135.3	-150.0
	2	20	-59.0	-69.3	-80.3	-92.2	-104.9	-118.5	-132.8	-148.0	-163.9
		25	-61.3	-71.9	-83.4	-95.7	-108.9	-122.9	-137.8	-153.6	-170.1
		30	-63.2	-74.2	-86.1	-98.8	-112.4	-126.9	-142.3	-158.5	-175.6
		40	-66.5	-78.0	-90.5	-103.9	-118.2	-133.4	-149.6	-166.6	-184.6
		50	-69.1	-81.1	-94.1	-108.0	-122.8	-138.7	-155.5	-173.2	-191.9
		60	-71.3	-83.7	-97.1	-111.4	-126.8	-143.1	-160.5	-178.8	-198.1
	3	20	-77.5	-90.9	-105.4	-121.0	-137.7	-155.5	-174.3	-194.2	-215.2
		25	-80.4	-94.4	-109.4	-125.6	-142.9	-161.3	-180.9	-201.5	-223.3
		30	-83.0	-97.4	-112.9	-129.7	-147.5	-166.5	-186.7	-208.0	-230.5
		40	-87.2	-102.4	-118.7	-136.3	-155.1	-175.1	-196.3	-218.7	-242.3
		50	-90.7	-106.4	-123.4	-141.7	-161.2	-182.0	-204.1	-227.4	-251.9
		60	-93.6	-109.9	-127.4	-146.3	-166.4	-187.9	-210.6	-234.7	-260.0
Partially Enclosed	1	20	-52.3	-61.3	-71.1	-81.7	-92.9	-104.9	-117.6	-131.0	-145.2
		25	-54.2	-63.7	-73.8	-84.7	-96.4	-108.8	-122.0	-136.0	-150.6
		30	-56.0	-65.7	-76.2	-87.5	-99.5	-112.3	-126.0	-140.3	-155.5
		40	-58.9	-69.1	-80.1	-92.0	-104.6	-118.1	-132.4	-147.5	-163.5
		50	-61.2	-71.8	-83.3	-95.6	-108.8	-122.8	-137.7	-153.4	-169.9
		60	-63.2	-74.1	-86.0	-98.7	-112.3	-126.7	-142.1	-158.3	-175.4
	2	20	-66.6	-78.2	-90.7	-104.1	-118.4	-133.7	-149.9	-167.0	-185.0
		25	-69.1	-81.1	-94.1	-108.0	-122.9	-138.7	-155.5	-173.3	-192.0
		30	-71.4	-83.7	-97.1	-111.5	-126.8	-143.2	-160.5	-178.9	-198.2
		40	-75.0	-88.0	-102.1	-117.2	-133.3	-150.5	-168.8	-188.0	-208.4
		50	-78.0	-91.5	-106.1	-121.8	-138.6	-156.5	-175.4	-195.5	-216.6
		60	-80.5	-94.5	-109.6	-125.8	-143.1	-161.5	-181.1	-201.8	-223.6
	3	20	-85.0	-99.8	-115.8	-132.9	-151.2	-170.7	-191.4	-213.2	-236.2
		25	-88.3	-103.6	-120.1	-137.9	-156.9	-177.1	-198.6	-221.3	-245.2
		30	-91.1	-106.9	-124.0	-142.4	-162.0	-182.8	-205.0	-228.4	-253.1
		40	-95.8	-112.4	-130.4	-149.7	-170.3	-192.2	-215.5	-240.1	-266.1
		50	-99.6	-116.9	-135.5	-155.6	-177.0	-199.8	-224.0	-249.6	-276.6
		60	-102.8	-120.6	-139.9	-160.6	-182.7	-206.3	-231.2	-257.7	-285.5

END OF REPORT

This evaluation report is provided for State of Florida product approval under Rule 61G20-3. The manufacturer shall notify CREEK Technical Services, LLC of any product changes or quality assurance changes throughout the duration for which this report is valid. This evaluation report does not express nor imply warranty, installation, recommended use, or other product attributes that are not specifically addressed herein.